COLDBAY

NSF • IP66 • COLD STORAGE • LINEAR HIGH-BAY

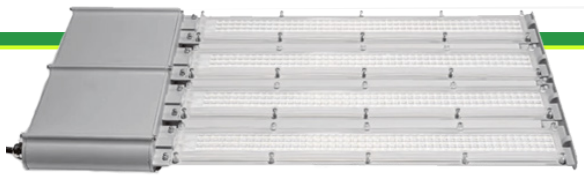

FOOD & BEVERAGE PROCESSING | MANUFACTURING & DISTRIBUTION | LIVESTOCK FARMING

The **Coldbay** is designed for the harsh environments found in food processing, heavy manufacturing, cold storage, warehouse, and distribution facilities. The IP66 waterproof rated fixture can operate in extreme temperature ranges. This fixture is ideal for new construction or as an upgrade on existing linear fluorescent and HID high-bay fixtures.

PERFORMANCE

LUMEN OUTPUT	15,000-60,000 lumens
LIFESPAN	L70 > 141,500 Hours
AMBIENT TEMPERATURE	-40°F to 131°F (-40°C to 55°C)
WARRANTY	5 Year
EFFICACY	>145 LPW
POWER WASHING	Up to 1600 PSI

ELECTRICAL

OPERATING VOLTAGE	120-480V
INPUT FREQUENCY	50/60Hz
INPUT WATTAGE	100-400W
SURGE PROTECTION	10kV + 10kA standard (20kA optional)
DIMMING	0-10V
POWER INPUT	Standard 6' Yellow Cable (5-conductor wire to pigtails)

CONSTRUCTION

IP RATING	IP66	
IK RATING	IK10	
WEIGHT	8.6 - 22.5lbs (3.9-10.2kg)	
DIMENSIONS	2ft - 12"W x 27"L	4ft -12"W x 52"L
HOUSING	Die Casted Aluminum Alloy	
FINISH	Common Epoxy Resin Powder Coat	
LENS	Polycarbonate	

OPTICAL

CRI	≥80 (90 Optional)
CCT	4000K, 5000K
BEAM ANGLE	45°+ 90° - AL, 90° - MD, 120° - WD

PROJECT

CATALOG CODE

TYPE

NOTES

NSF | IP66 | DLC PREMIUM | c UL us LISTED | USDA

Not all product variations listed on this page are DLC qualified.
Visit www.designlights.org/searchto confirm.

EMERGENCY BATTERY BACKUP

Option for **Coldbay** fixtures:

- Minimum 90-Minute Duration
- 16W 2400 Lumen
- Temperature Range from 50°F to 122°F (10°C to 50°C)

Address: Unit 75, Standard Way, Gravelly Industrial Park, Birmingham, B24 8TL **Tel:** 0121 726 6999 | **Fax:** 0121 726 6997
Email: sales@avanti-lighting.co.uk **Web:** www.avanti-lighting.co.uk

COLDBAY

NSF • IP66 • COLD STORAGE • LINEAR HIGH-BAY

AVANTI LIGHTING

ORDERING INFORMATION

We have custom and standard manufacturing options. Use this form to build your part number or reach out to our sales team for assistance.

GET YOUR PRODUCTS FASTER WITH OUR QUICK SHIP PROGRAM

ORDER EXAMPLE

Series	Performance + Lumen PKG	Distribution	Voltage	Integral Surge Protector Option	Control Option	Color Temp	CRI	Mounting	Finish	Options & Plugs
COLD	ST23L	MD	MV	S1	C1	50K	80	CH	G	P3 EM

ORDER CONFIGURATION

STANDARD VALUES

Series	Performance & Lumen PKG (lumens)		Distribution	Voltage	Integral Surge Protector (SP) Option	Control Option	Color Temp	CRI	Mounting	Finish
COLD	ST - Standard	PR - Premium	AL Aisle (45+90°)	MV 120-277V	Blank Standard SP	Blank No Controls	40K 4000 K	80 80 CRI	CH Chain Mount	G Gray
	ST15L 15,000	PR19L 18,600	MD Medium (90°)	HV 277-480V	S1 10ka SP 120-277V	C1 Cold Storage / Wet Location Occupancy Sensor	50K 5000 K	90 90 CRI	SB Surface Bracket	W White
	ST23L 22,500	PR24L 23,250	WD Wide (120°)		S2 20ka SP 120-277V				PB Pendant Bracket	
	ST30L 30,000	PR31L 31,000			S3 20ka SP 277-480V				A10 10' Aircraft	
	ST38L 37,500	PR39L 38,750							A16 16' Aircraft	
	ST45L 45,000	PR47L 46,500								
	ST60L 60,000	PR62L 62,000								

OPTIONS

Options	Description
EM	Emergency Battery Backup *see restrictions*
YX	5 conductor yellow wire that is X feet long
WX	5 Conductor white cable X feet long
UP	Uplight (120deg uplight angle)
M3	Bulkhead mini receptacle, 3 wire, Male
M5	Bulkhead mini receptacle, 5 wire, Male

CORDSETS (ORDER SEPARATELY)

Order Code	Description
MIN-3FP-6	3 conductor Female 6' Cable to pigtails
MIN-5FP-6	5 conductor Female 6' Cable to pigtails
MIN-3MFP-6	3 conductor Female 6' Cable to Male
MIN-5MFP-6	5 Conductor Female 6' Cable to Male

PLUGS

Plugs	Description
P3	3pin Mini Connector Male Plug
P5	5pin Mini Connector Male Plug
5P	120v Plug
L6P	Locking 208/240v Plug
L7P	Locking 277v Plug
W5P	Watertite 120v Plug
W6P	Watertite Locking 208/240v Plug
W7P	Watertite Locking 277v Plug

Δ OPTION VALUE ORDERING RESTRICTIONS

- EM Backup is not supported by HV fixtures
- EM Backup temperature range 10-50°C (50-122°F)
- C1 Option renders fixture as IP65
- ST15L and ST23L only rated -20-55°C
- ST15L and ST23L come with standard 2.5kV surge protection
- Plug Options 5P, L6P, L7P are not IP rated
- Cordset options are only suitable for M3/M5 bulkhead options
- C1 only supports 120-347V
- Uplight option features 1 LED light bar (120° lens) facing upwards
- Surface/Pendant Brackets only come with hardware to attach bracket to fixture

Address: Unit 75, Standard Way, Gravelly Industrial Park, Birmingham, B24 8TL **Tel:** 0121 726 6999 | **Fax:** 0121 726 6997
Email: sales@avanti-lighting.co.uk **Web:** www.avanti-lighting.co.uk

COLDBAY

NSF • IP66 • COLD STORAGE • LINEAR HIGH-BAY

OPERATING CHARACTERISTICS

COLDBAY CHARACTERISTICS

Lumen Package	Wattage				Amp Draw							Weight		Comparable Light Source
	120V	277V	347V	480V	120V	277V	347V	480V	Length	Width	Depth	lbs	kg	
15L (ST)	106	104	102	102	0.89	0.4	0.3	0.22	26.71"	12.20"	2.33"	8.60	3.9	4-Lamp T8HL, 175W HID
19L (PR)	122	118	124	123	1.03	0.45	0.37	0.27	26.71"	12.20"	2.33"	8.60	3.9	4-Lamp T5HO, 6-Lamp T8HL, 250W HID
23L (ST)	159	155	150	150	1.34	0.59	0.44	0.32	26.71"	12.20"	2.33"	9.45	4.29	8-Lamp T8HL, 320W HID
24L (PR)	152	147	149	149	1.28	0.56	0.44	0.32	26.71"	12.20"	2.33"	9.45	4.29	8-Lamp T8HL, 320W HID
30L (ST)	212	207	197	196	1.78	0.79	0.58	0.42	26.71"	12.20"	2.33"	11.15	5.06	10-Lamp T8HL, 6-Lamp T5HO, 400W HID
31L (PR)	193	191	190	189	1.62	0.73	0.56	0.41	51.89"	12.20"	2.33"	18.55	8.41	10-Lamp T8HL, 6-Lamp T5HO, 400W HID
38L (ST)	261	255	256	254	2.20	0.97	0.76	0.55	51.89"	12.20"	2.33"	18.55	8.41	350W XHO HID, 360W HID
39L (PR)	254	251	251	250	2.14	0.95	0.74	0.54	51.89"	12.20"	2.33"	18.55	8.41	350W XHO HID, 360W HID
45L (ST)	318	311	299	299	2.68	1.18	0.88	0.65	51.89"	12.20"	2.33"	18.55	8.41	10-Lamp T5HO, 400W HO HID
47L (PR)	303	293	298	298	2.55	1.11	0.88	0.64	51.89"	12.20"	2.33"	18.55	8.41	10-Lamp T5HO, 400W HO HID
60L (ST)	424	415	394	392	3.57	1.58	1.16	0.85	51.89"	12.20"	2.33"	22.50	10.21	750W HID
62L (PR)	387	383	381	378	3.26	1.46	1.13	0.82	51.89"	12.20"	2.33"	22.50	10.21	750W HID

(ST) = Standard | (PR) = Premium

AMBIENT TEMPERATURE RATINGS

Performance Package	Fixture	with MS	with EM
ST	-20°C to 55°C	-20°C to 55°C	10°C to 50°C
PR	-40°C to 55°C	-40°C to 55°C	10°C to 50°C

COLDBAY EMERGENCY BACKUP INFORMATION (5000K, 80CRI)

FX Order Code	EM Manufacturer	EM Driver Part	EM Battery Part	Field Installable	Lumen Output
EM	Fulham	FHS2-UNV-36L	FHSBATL6-1.5	No	2400LM

COLDBAY AL LIGHT DISTRIBUTION

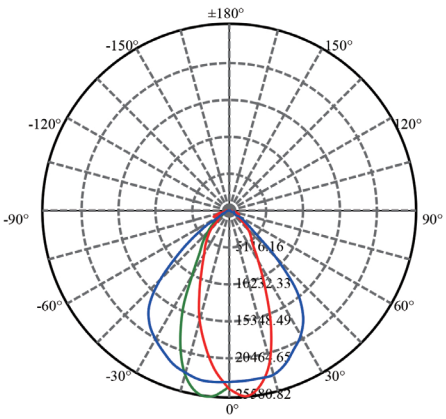

COLDBAY MD LIGHT DISTRIBUTION

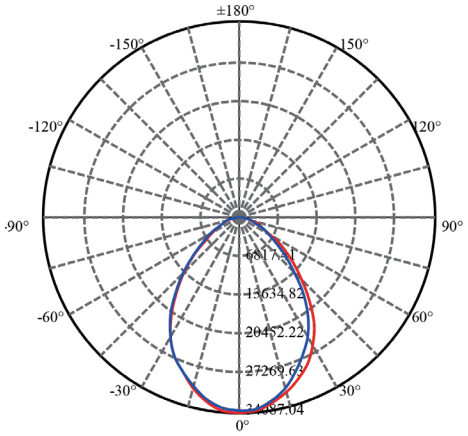

COLDBAY WD LIGHT DISTRIBUTION

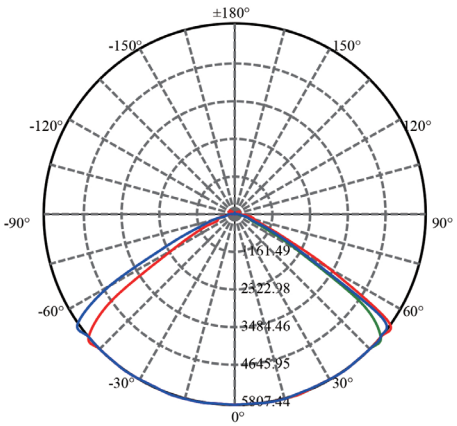

Address: Unit 75, Standard Way, Gravelly Industrial Park, Birmingham, B24 8TL **Tel:** 0121 726 6999 | **Fax:** 0121 726 6997
Email: sales@avanti-lighting.co.uk **Web:** www.avanti-lighting.co.uk

SURGE PROTECTION DEVICE INFORMATION

Order Code	S1	S2	S3
MODEL	SP1	PU-20KS10KHT	DS-PS-20KS10KHT
MANUFACTURER	Philips	Inventronics	Inventronics
OPERATING VOLTAGE	120-277V	120-277V	277-480V
INPUT FREQUENCY	50/60Hz	50/60Hz	50/60Hz
MAXIMUM DISCHARGE CURRENT (IMAX)	10kA, 8/20µs	20kA, 8/20µs	20kA, 8/20µs
NOMINAL DISCHARGE CURRENT (IN)		10kA, 8/20µs	10kA, 8/20µs
OPEN CIRCUIT VOLTAGE		20kV	20 kV
MEASURED LIMITING VOLTAGE (L-N)		2600V	3000V
MEASURED LIMITING VOLTAGE (L-G, N-G)		2000V	3000V
NET WEIGHT		50g	60g
OPERATING TEMPERATURE		-40°C to 85°C	-40°C to 85°C
DIMENSIONS		0.6"x1.1"x11.8"	0.7"x1.1"x11.8"
NUMBER OF SURGES			
20 kA		1	1
10 kA		15	15
4 kA		100	100
2 kA		500	500
1 kA		1000	1,000

WIRING DIAGRAM

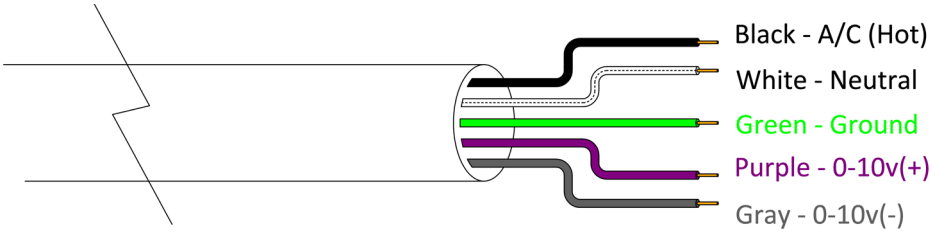

EMERGENCY WIRING DIAGRAM

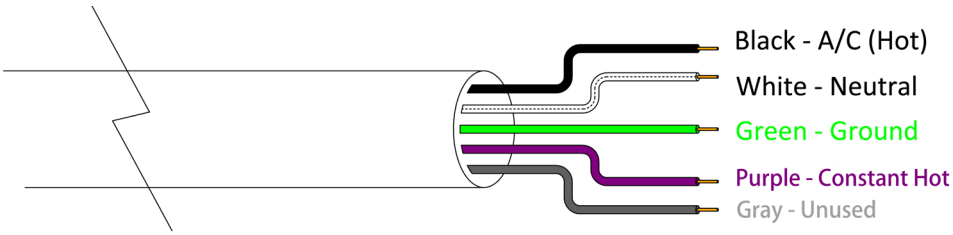

COLDBAY

NSF • IP66 • COLD STORAGE • LINEAR HIGH-BAY

2FT DIMENSIONAL DATA

Coldbay 2ft

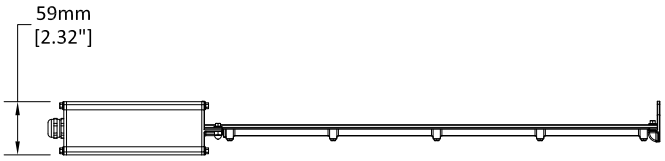

Coldbay 2ft with EM Backup

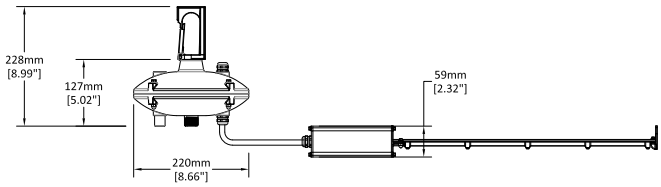

Coldbay 2ft 4s

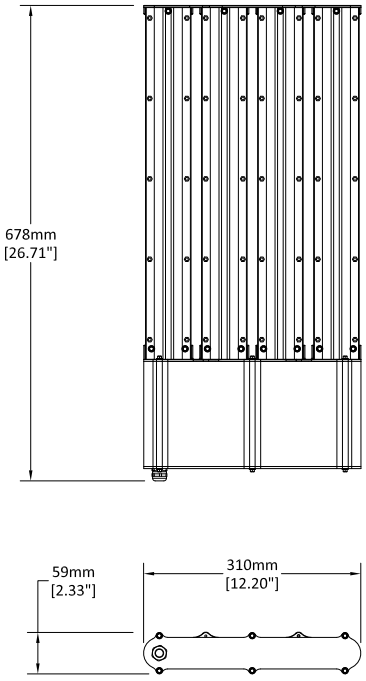

Coldbay 2ft 3s top view

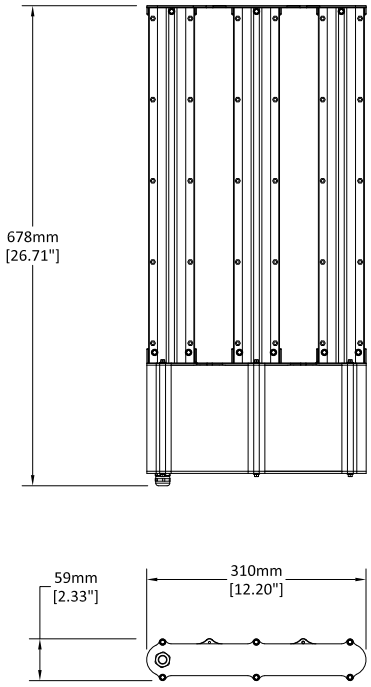

Coldbay 2ft 4s bottom view

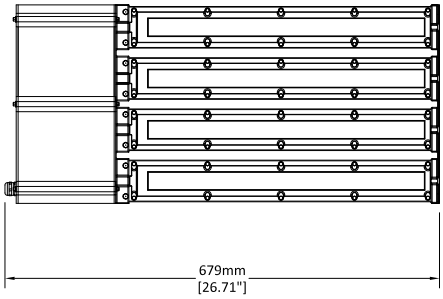

Coldbay 2ft 3s bottom view

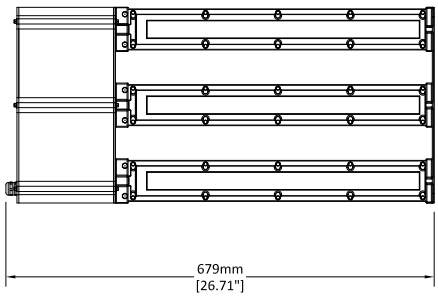

Address: Unit 75, Standard Way, Gravelly Industrial Park, Birmingham, B24 8TL **Tel:** 0121 726 6999 | **Fax:** 0121 726 6997
Email: sales@avanti-lighting.co.uk **Web:** www.avanti-lighting.co.uk

COLDBAY

NSF • IP66 • COLD STORAGE • LINEAR HIGH-BAY

2FT DIMENSIONAL DATA

Coldbay 2ft with Pendant Bracket

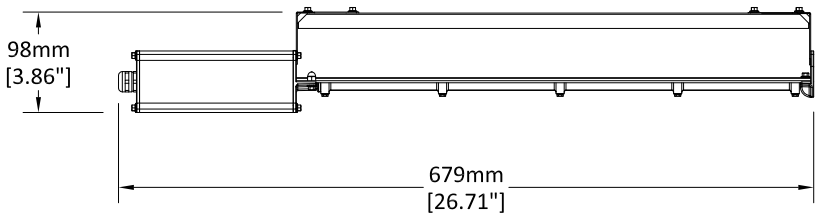

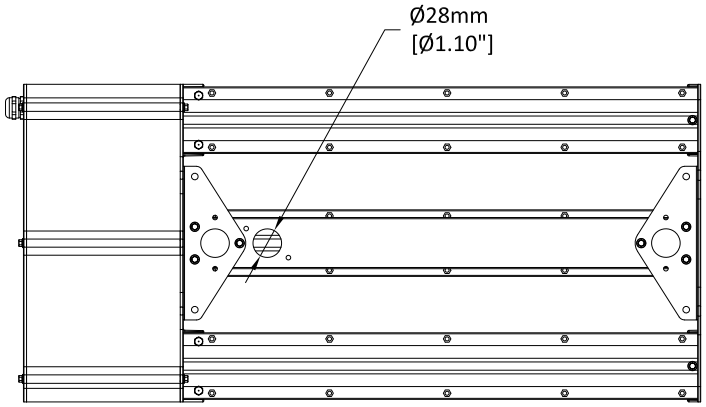

Coldbay 2ft with Surface Bracket

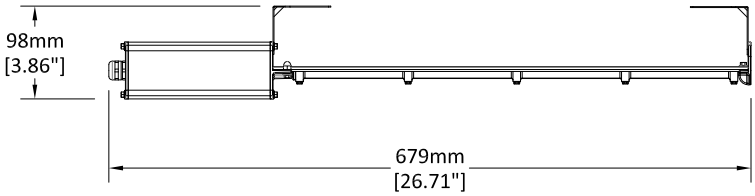

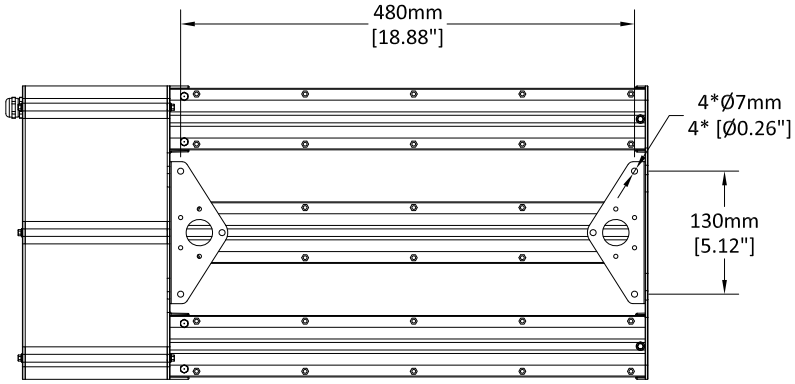

Address: Unit 75, Standard Way, Gravelly Industrial Park, Birmingham, B24 8TL **Tel:** 0121 726 6999 | **Fax:** 0121 726 6997
Email: sales@avanti-lighting.co.uk **Web:** www.avanti-lighting.co.uk

COLDBAY

NSF • IP66 • COLD STORAGE • LINEAR HIGH-BAY

4FT DIMENSIONAL DATA

Coldbay 4ft

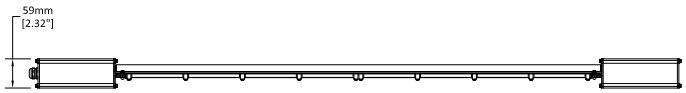

Coldbay 4ft with EM Backup

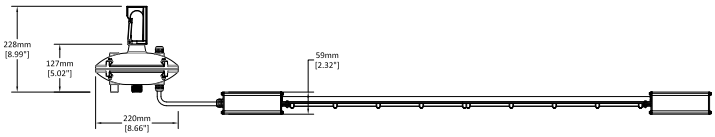

Coldbay 4ft 4s

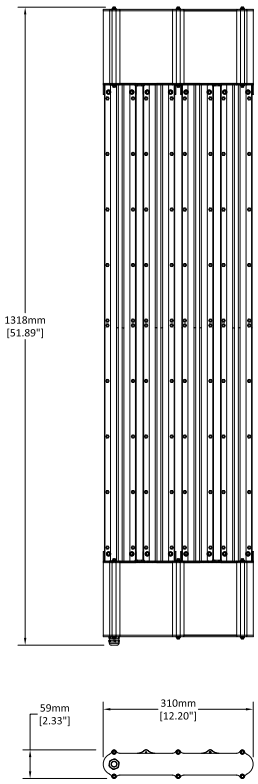

Coldbay 4ft 3s top view

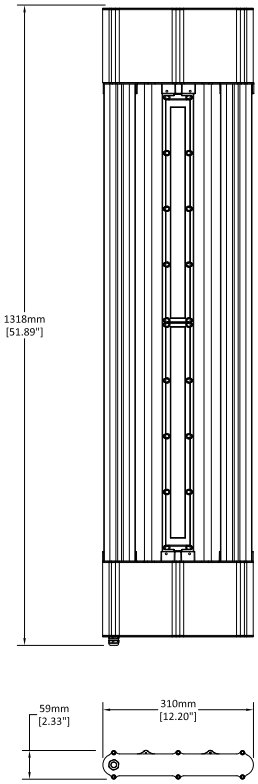

Coldbay 4ft 4s bottom view

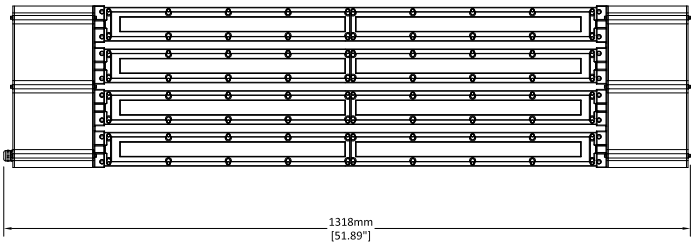

Coldbay 4ft 3s bottom view

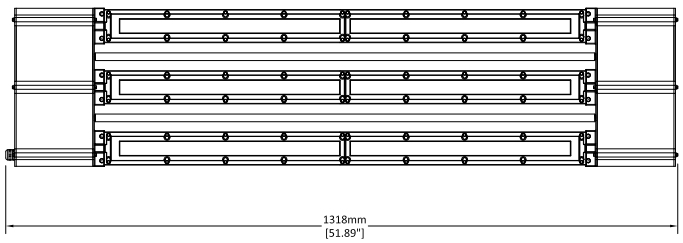

Address: Unit 75, Standard Way, Gravelly Industrial Park, Birmingham, B24 8TL **Tel:** 0121 726 6999 | **Fax:** 0121 726 6997
Email: sales@avanti-lighting.co.uk **Web:** www.avanti-lighting.co.uk

COLDBAY

NSF • IP66 • COLD STORAGE • LINEAR HIGH-BAY

4FT DIMENSIONAL DATA

Coldbay 4ft with Surface Bracket

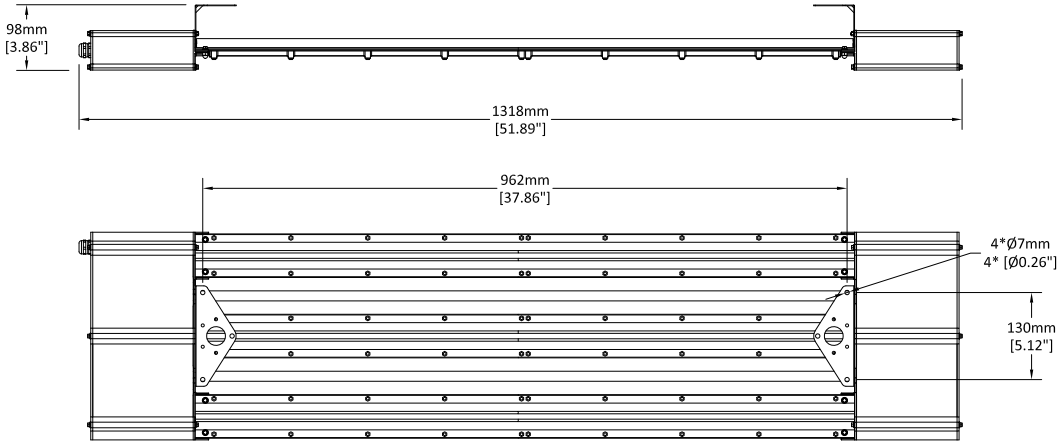

Coldbay 4ft with Pendant Bracket

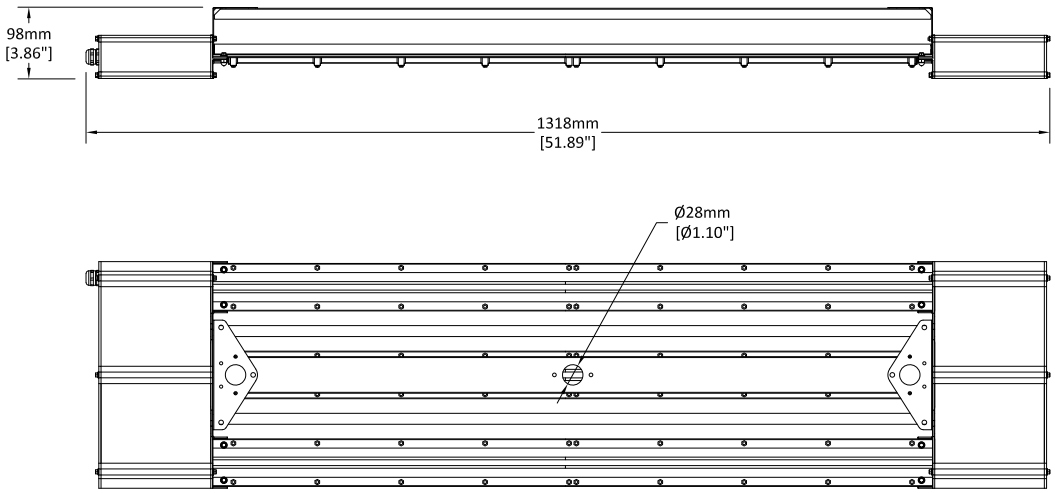

Address: Unit 75, Standard Way, Gravelly Industrial Park, Birmingham, B24 8TL **Tel:** 0121 726 6999 | **Fax:** 0121 726 6997
Email: sales@avanti-lighting.co.uk **Web:** www.avanti-lighting.co.uk

MOTION SENSOR

OSFHW-CTW Operating Specifications	
IP RATING	IP65
INPUT VOLTAGE	120-277-347V
OPERATIONAL FREQUENCIES	50/60Hz
LOAD RATING	800VA @ 120V Ballast 1200VA @ 277V Ballast 1500VA @ 347V Ballast
STANDBY POWER CONSUMPTION	120V - 130mW - .13W 277V - 450mW - .45W 347V - 460mW - .46W
TIME DELAY	30sec - 30min
WIRE DESIGNATION	Line - Black, Load - Red, Neutural - White
OPERATING TEMPERATURE RANGE	-40 to 160°F (-40 to 71°C)
STORAGE TEMPERATURE RANGE	-14 to 160°F (-25 to 71°C)
RELATIVE HUMIDITY	20-90% non-condensing
LENS OPTIONS (INCLUDED)	360° High-bay 360° Low-bay Aisle Lens Mask

PACKAGING DIMENSIONS

	2ft		4ft	
	Box	Pallet	Box	Pallet
QTY - FIXTURES	1	80	1	50
BOX	30"L x 14"W x 3"H	48"L x 40"W x 72"H	54"L x 14"W x 3"H	58"L x 40"W x 65"H
WEIGHT	12lbs	975lbs	23lbs	1165lbs